BL2838

Application：Vacuum Robot

用途：智能吸塵機器人

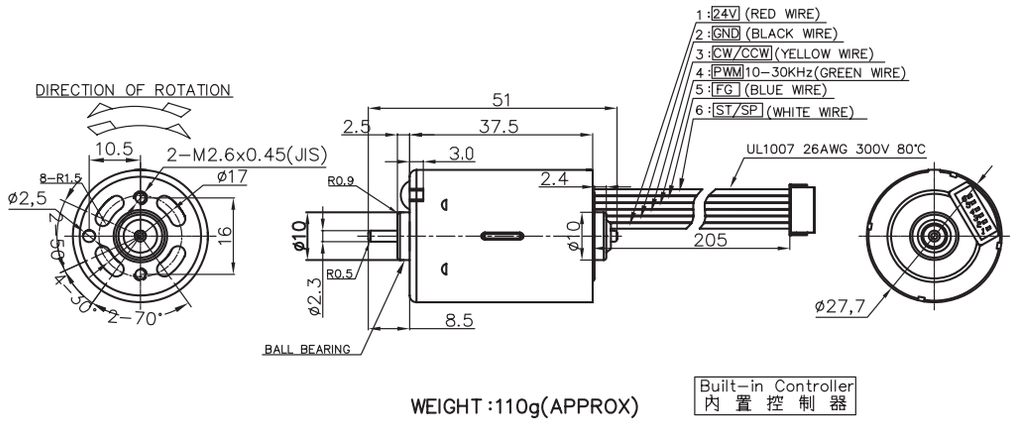

WEIGHT :110g(APPROX)

Built-in Controller
內 置 控 制 器

MODEL	VOLTAGE		NO LOAD		AT MAXIMUM EFFICIENCY						STALL		
	OPERATING RANGE	NOMINAL	SPEED	CURRENT	SPEED	CURRENT	TORQUE		OUTPUT	EFF	CURRENT	TORQUE	
			rpm	A	rpm	A	g-cm	mN-m	W	%	A	g-cm	mN-m
BL2838B-12V2.9K1.4W-B0X0N	9.0-30.0	12.0V CONSTANT	2900	0.67	2248	0.28	62.55	6.13	1.44	55	0.82	267.59	26.23
BL2838B-12V12.7K15W-B1X0N	9.0-30.0	12.0V CONSTANT	12700	0.31	10730	1.79	140.30	13.75	15.46	76	8.61	803.31	78.76
BL2838B-24V6.0K4W-C1Y1P	9.0-30.0	24.0V CONSTANT	6000	0.05	5139	0.28	82.83	8.12	4.37	70	1.45	541.46	53.08
BL2838B-12V10K10W-C1Y1P	9.0-30.0	12.0V CONSTANT	10380	0.21	8834	1.21	117.20	11.49	10.63	75	6.63	810.00	79.41

馬達的出軸長度及性能參數，EMC 對策可依客人要求做調整，詳情可詢問相關業務人員。
Please inquire your sales representative for output,performance and EMC solution.

BL2838B-12V2.9K1.4W-B0X0N 12.0V

Volt	Amp	Eff(%)	W(out)	kRPM
20.0	0.90	100	3.0	3.0
18.0	0.81	90	2.7	2.7
16.0	0.72	80	2.4	2.4
14.0	0.63	70	2.1	2.1
12.0	0.54	60	1.8	1.8
10.0	0.45	50	1.5	1.5
8.0	0.36	40	1.2	1.2
6.0	0.27	30	0.9	0.9
4.0	0.18	20	0.6	0.6
2.0	0.09	10	0.3	0.3
0.0	0.00	0	0.0	0.0

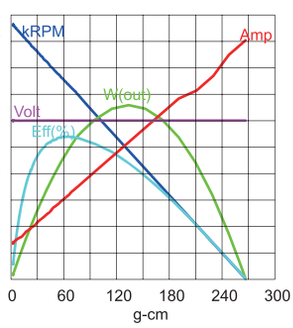

BL2838B-12V12.7K15W-B1X0N 12.0V

Volt	Amp	Eff(%)	W(out)	kRPM
20.0	9.0	100	30.0	20.0
18.0	8.1	90	27.0	18.0
16.0	7.2	80	24.0	16.0
14.0	6.3	70	21.0	14.0
12.0	5.4	60	18.0	12.0
10.0	4.5	50	15.0	10.0
8.0	3.6	40	12.0	8.0
6.0	2.7	30	9.0	6.0
4.0	1.8	20	6.0	4.0
2.0	0.9	10	3.0	2.0
0.0	0.0	0	0.0	0.0

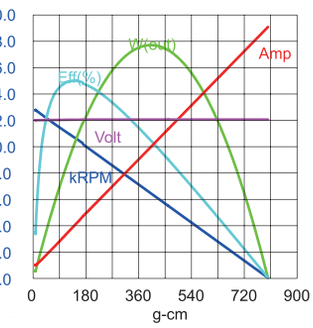

BL2838B-24V6.0K4W-C1Y1P 24.0V

Volt	Amp	Eff(%)	W(out)	kRPM
30.0	2.0	100	9.0	7.0
27.0	1.8	90	8.1	6.3
24.0	1.6	80	7.2	5.6
21.0	1.4	70	6.3	4.9
18.0	1.2	60	5.4	4.2
15.0	1. 0	50	4.5	3.5
12.0	0.8	40	3.6	2.8
9.0	0.6	30	2.7	2.1
6.0	0.4	20	1.8	1.4
3.0	0.2	10	0.9	0.7
0.0	0.0	0	0.0	0.0

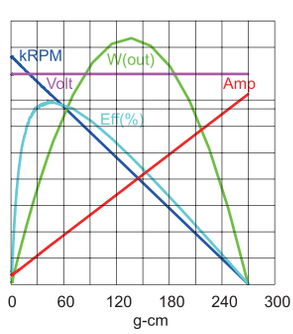

BL2838B-12V10K10W-C1Y1P 12.0V
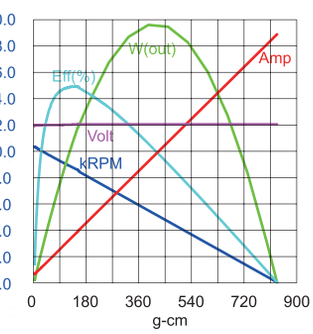
Volt	Amp	Eff(%)	W(out)	kRPM
20.0	7.0	100	20.0	20.0
18.0	6.3	90	18.0	18.0
16.0	5.6	80	16.0	16.0
14.0	4.9	70	14.0	14.0
12.0	4.2	60	12.0	12.0
10.0	3.5	50	10.0	10.0
8.0	2.8	40	8.0	8.0
6.0	2.1	30	6.0	6.0
4.0	1.4	20	4.0	4.0
2.0	0.7	10	2.0	2.0
0.0	0.0	0	0.0	0.0