BL40E16

Application：Hair Dryer

用途：吹風機

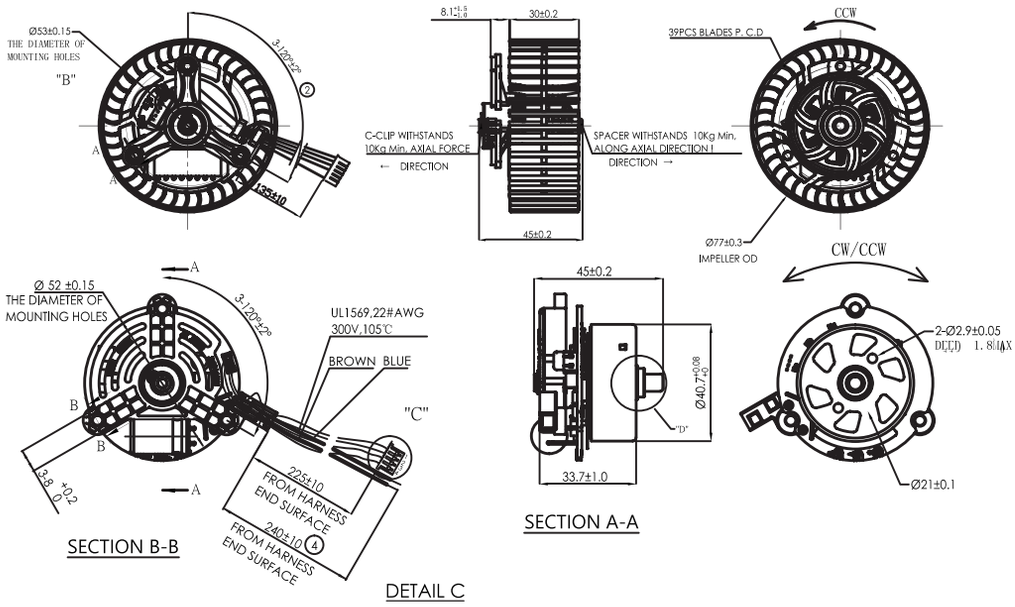

Motor Performance（Without Fan）/ 電機性能（無風葉）

MODEL	VOLTAGE		NO LOAD		AT MAXIMUM EFFICIENCY						STALL		
	OPERATION RANGE	NOMINAL	SPEED	CURRENT	SPEED	CURRENT	TORQUE		OUTPUT	EFF.	CURRENT	TORQUE	
			rpm	A	rpm	A	g-cm	mN-m	W	%	A	g-cm	mN-m
BL40E16B-220V19K80W-C1Y0V	(176-240)Vac	220Vac/60HZ	19000	0.12	14800	0.5	260	25.5	40	64	1.7	1186	116.3
BL40E16B-120V18K110W-C1Y0P	(96-144)Vac	120Vac/60HZ	18000	0.24	10760	0.8	360	35.3	40	63	2.0	1260	123.5

馬達的出軸長度及性能參數，EMC 對策可依客人要求做調整，詳情可詢問相關業務人員。
Please inquire your sales representative for output,performance and EMC solution.

Motor Performance（With Fan）/ 電機性能（帶風葉）

MODEL	VOLTAGE		NO LOAD		ON LOAD (IN DRYER HOUSING)				CONTROLLER FUNCTION
	OPERATION RANGE	NOMINAL	SPEED	CURRENT	IMPELLER SPEED	INPUT CURRENT	INPUT POWER	AIR VELOCITY	
			rpm	A	rpm	A	w	m/s	
BL40E16B-220V19K80W-C1Y0V	(176-240)Vac	220Vac/60HZ	19000	0.12	8800	0.7	105	18.5	1.VOLTAGE SPEED ADJUSTMENT 2.PWM SPEED ADJUSTMENT 3.LOCKED ROTOR PROTECTION 4.OVER CURRENT PROTECTION 5.OVER-VOLTAGE PROTECTION 6.OVER TEMPERATURE PROTECTION 7.FG PROTECTION
BL40E16B-120V18K110W-C1Y0P	(96-144)Vac	120Vac/60HZ	18000	0.24	8400	1.1	100	18.5	
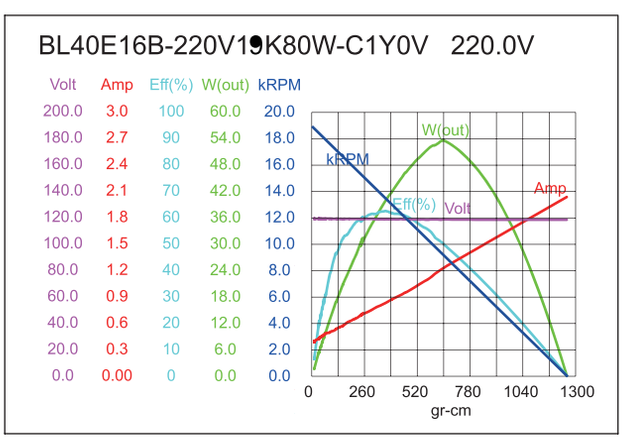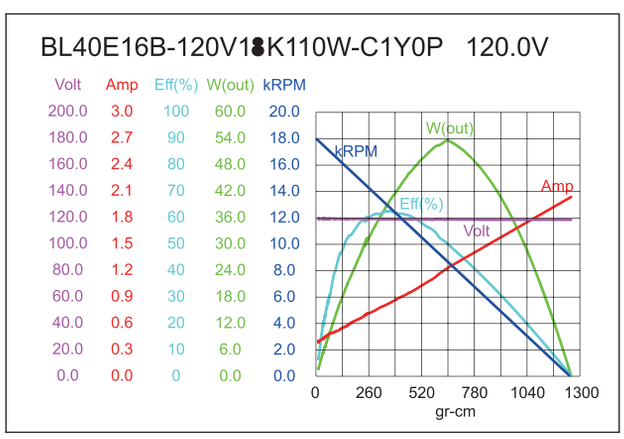
馬達的出軸長度及性能參數，EMC 對策可依客人要求做調整，詳情可詢問相關業務人員。
Please inquire your sales representative for output,performance and EMC solution.