FLUSHING TYPE DIAPHRAGM SEAL

DT131-M / DT131-P

DT131 diaphragm seal is designed to be used in highly viscous process media such as pulp, paper, waste treatment, and plastic/chemical process industries. DT131 is easy to assemble with pressure gauges, pressure switches, and pressure instruments. It is available with a flushing hole to clean the media which may clog membrane and process connection.

DT131-M (metal)

DT131-P (plastic)

Approvals:

Technical Data

Instrument Connection: female thread ¼" to ½"NPT or BSP
Membrane Size: ø75mm
Process Connection: ½"NPT or BSP female
Temperature Limited: -40~+150°C cooling element or capillary line up to 350°C
Pressure Range Limited:
–DT131-M: -760mmHg~0, maximum up to 40kg/cm²;
–DT131-P: maximum up to 10kg/cm²
Upper Housing Material: SS316 (standard)
Lower Housing Material: –DT131-M: SS316, or other on request
–DT131-P: PVC, PP, PVDF, Teflon available
Membrane Material: –DT131-M: SS316L (standard); Hastelloy C276, Tantalum on request
–DT131-P: SS316L+Teflon lining (standard)

Dimensions

Item	Description of Parts
a	Instrument connection
b	Gasket, PTFE
c	Upper housing
d	Lower housing
e	Flushing ring
f	Plate, SS316
g	Screw bolt, SS316
h	Process connection
i	Membrane

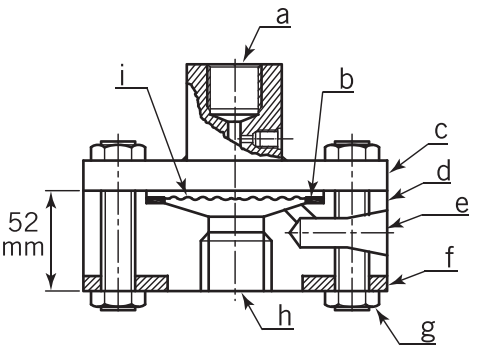

DT131-P (plastic)

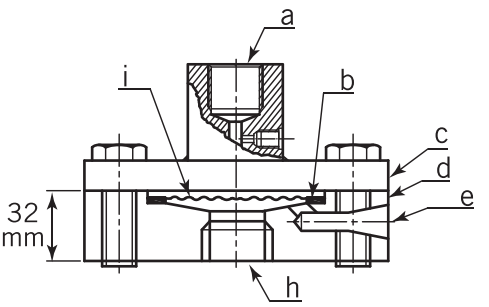

DT131-M (metal)

Ordering Information

DT131	Code	Type		
	M	metal type	P	plastic type

Code	Instrument Connection (Female)
	(A) ¼"BSP (B) ¼"NPT (C) ⅜"BSP
	(D) ⅜"NPT (E) ½"BSP (F) ½"NPT

Code	Membrane Size
1	ø75mm

Code	Process Connection
	(1) ½" (standard) (0) optoin

Code	Thread Type (female)
	(1) NPT (2) BSP (0) option

Code	Flusing Connection (part e)				
A	½"NPT (standard)	B	¼"NPT	0	Option

Code	Upper Housing Material
S	SS316

Code	Lower Housing Material
M	(1) SS316, standard (2) option
P	(1) PVC (2) PP (3) PVDF (4) Teflon

Code	Membrane Material
M	(1) SS316L (2) Hastelloy C276 (3) Tantalum
P	(1) SS316L+Teflon lining

DT131						+					Complete ordering code

WWW.NEW-FLOW.COM • TEL: 886-7-8135500 • FAX: 886-7-8225588 • Email: info@new-flow.com