LAP JOINT FLANGE WITH WETTED FACE DIAPHRAGM SEAL DT140

DT140 flange type with sealing face diaphragm seal is especially designed for applications at aggressive, contaminated or hot media. And, the membrane is flush welded to the rise face of flange. DT140 is easy to assemble with pressure gauges, pressure switches, and pressure instruments.

Technical Data

Instrument connection: female thread ¼" to ½"NPT or BSP
Process connection: 1" to 3" Lap Joint Flange; and option: welded flange type available. (please consult with manufacturer.)
Flange Rating: JIS, ANSI, DIN rating available
Temperature Limited: -40~+150°C cooling element or capillary ling up to 350°C
Pressure Range & Flange Size Limited:

Size	Flange Rating	Pressure Range
1"	150# ~ 600#	maximum up to 40 kg/cm² minimum 0~6 kg/cm²
1½"	150# ~ 600#	maximum up to 40 kg/cm² minimum 0~2.5 kg/cm²
2"	150# ~ 600#	maximum up to 40 kg/cm² minimum 0~1 kg/cm²
3"	150# ~ 600#	maximum up to 40 kg/cm² minimum -1~0 kg/cm²

Option: Upper pressure available, according to flange rating on request

Approvals:

Dimensions-mm

Item	Description of Parts
a	Instrument Connection
b	Upper Housing
c	Lower Housing Flange
d	Membrane (wetted face)
e	Filling Port

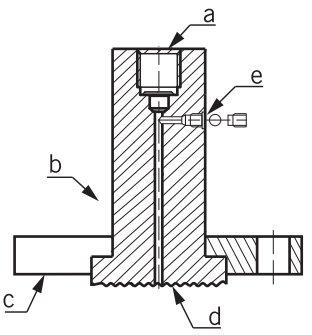

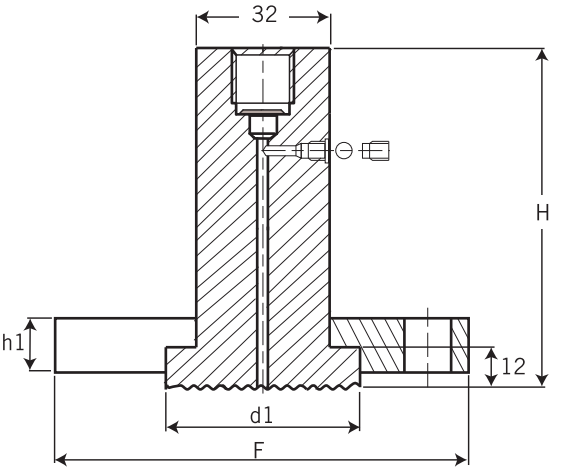

unit=mm

Size	H	d1
1"	66	54
1½"	71	74
2"	74	92
3"	80	127

* F & h1: Dimensions to suit standard flange outside size as JIS, ANSI and DIN, etc, upon request.

Ordering Information

DT140	Code	Instrument Connection (Female)
		(A) ¼"BSP (B) ¼"NPT (C) ⅜"BSP (D) ⅜"NPT (E) ½"BSP (F) ½"NPT

Code	Process Connection Size
	(1) 1" (2) 1½" (3) 2" (4) 3"

Code	Flange Rating
	(1) 150# (2) 300# (3) 600#

Code	Upper Housing Material
	(S) SS316 (standard) (O) option

Code	Lower Housing Flange Material
	(S) SS316 (O) option

Code	Wetted Parts Material
	(1) Hastelloy C276 (2) Tantalum (3) PTFE Lining

DT140							Complete Ordering Code

WWW.NEW-FLOW.COM • TEL: 886-7-8135500 • FAX: 886-7-8225588 • Email: info@new-flow.com